300 Series NO.2 ~ NO.4

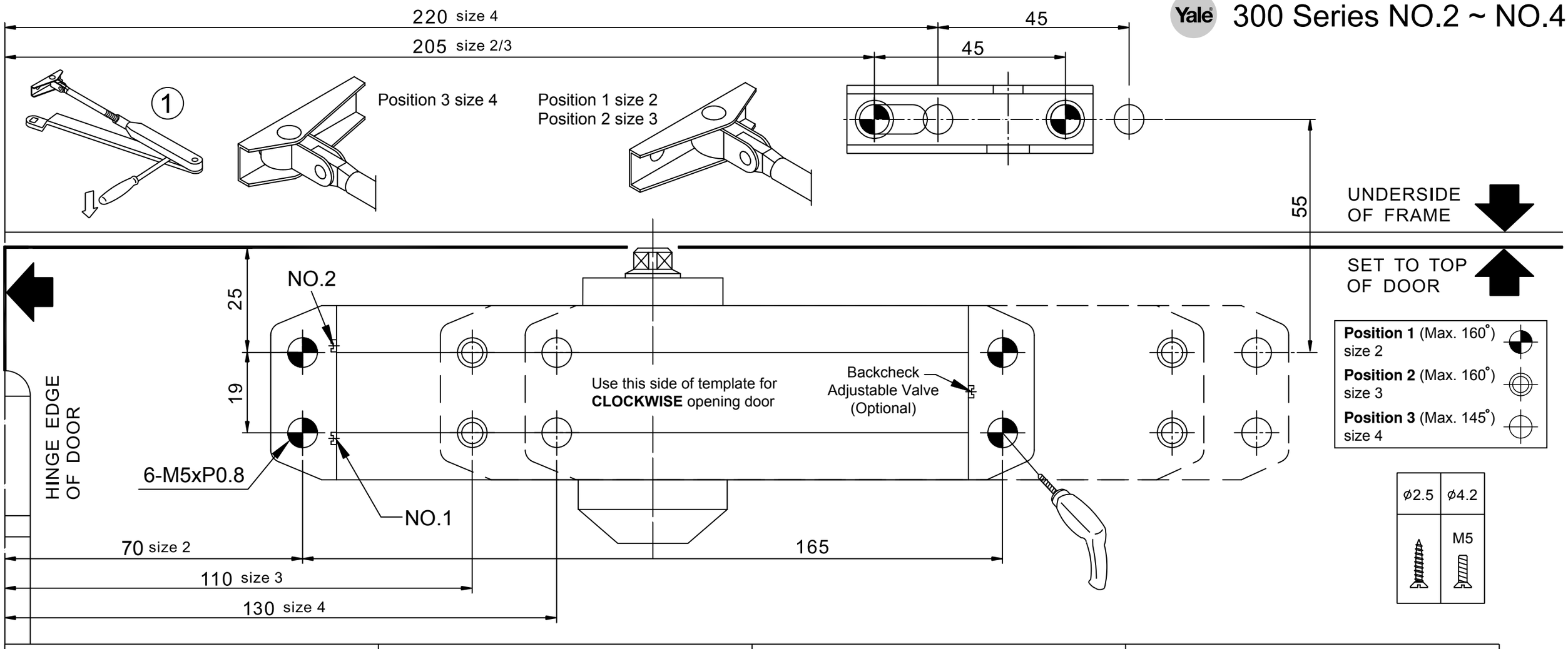

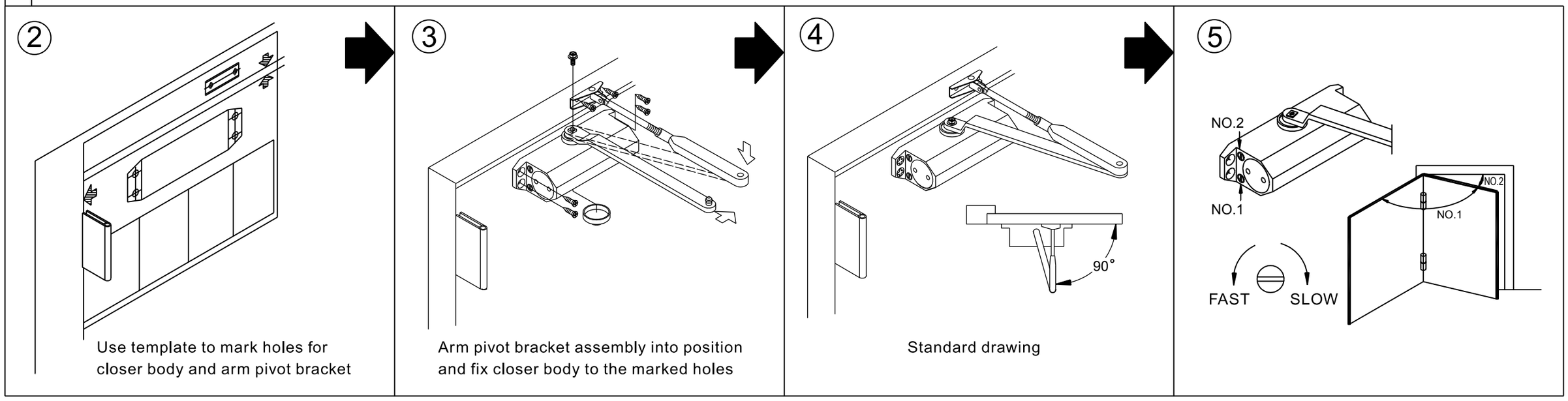

300 Series NO.2 ~ NO.4

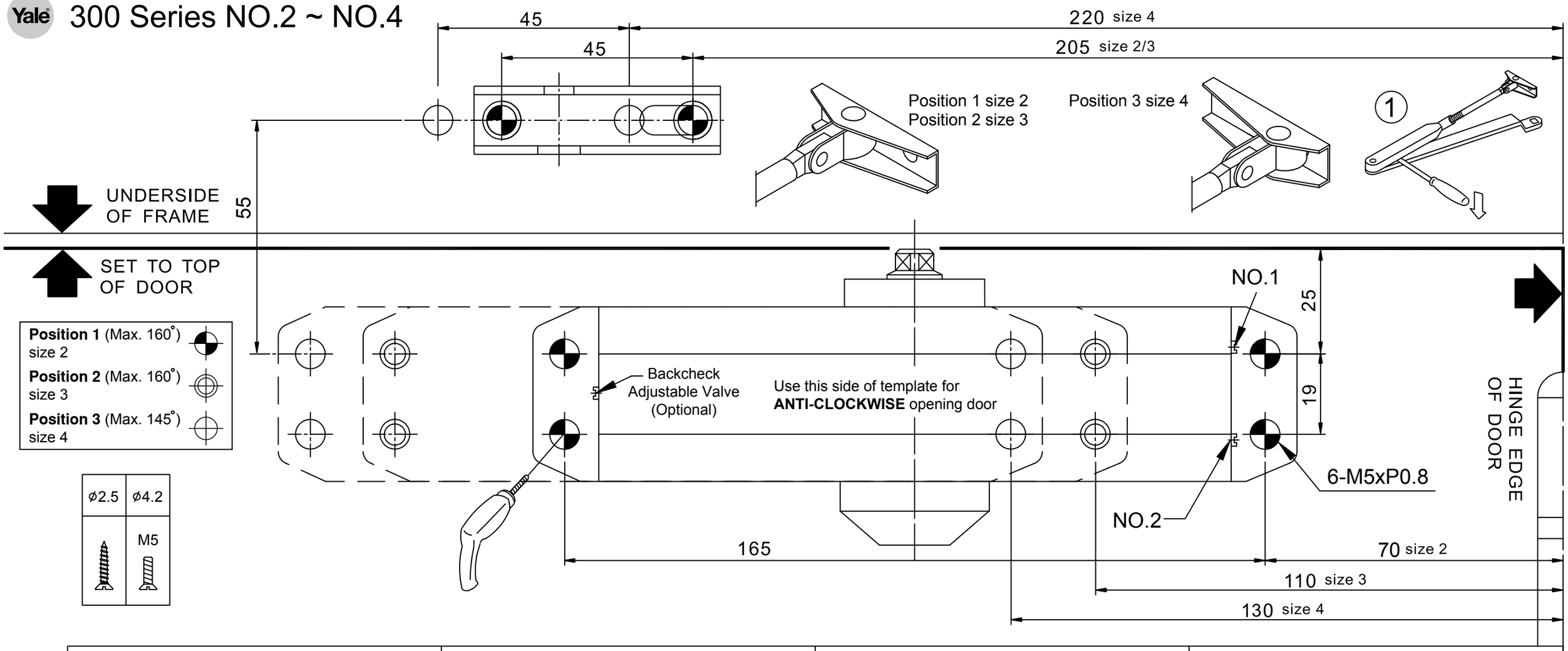

ø2.5	ø4.2
	M5

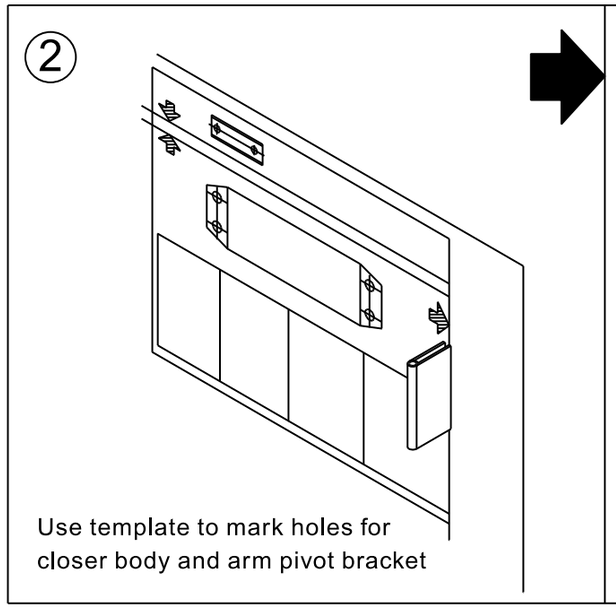

Use template to mark holes for closer body and arm pivot bracket

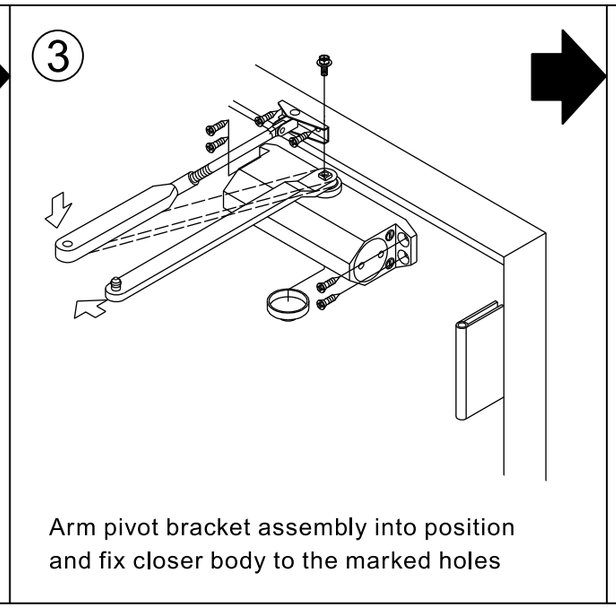

Arm pivot bracket assembly into position and fix closer body to the marked holes

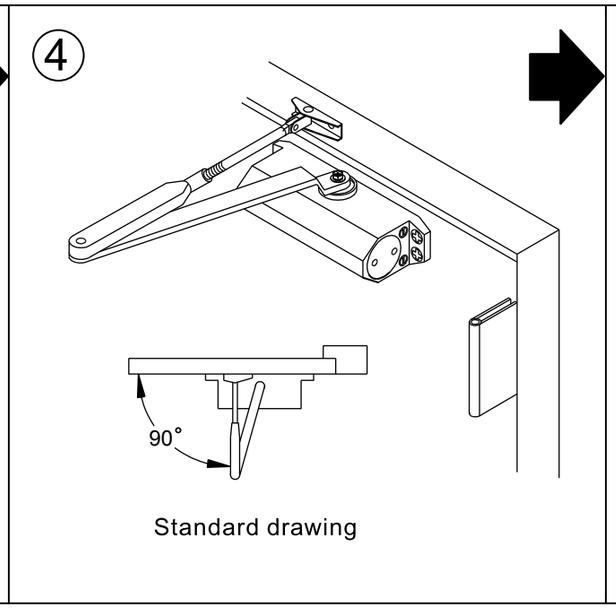
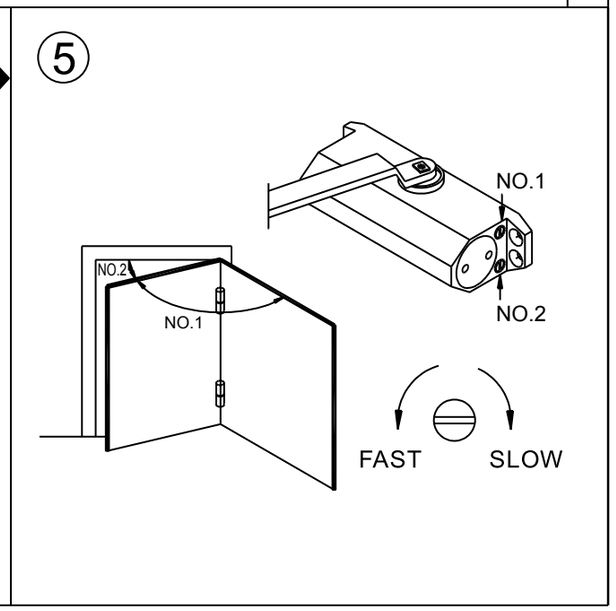
Standard drawing